Ingenjörsmässighet och färdighetsträning

Creo Parametric som läroplattform i universitetsutbildningen

LINKÖPINGS UNIVERSITET

Agenda

- Introduktion
- Teorier om lärande
- CAD i ingenjörsutbildningen vid LiU
- Möjligheter för framtiden

Peter Hallberg

- Avd. för Maskinkonstruktion, LiU
- Univ. adj.
- Forskar på deltid
- Studierektor, exjobbskoordinator
- Programplanerare för Mi
- M
- ProE v.14...

Ingenjörsmässighet & färdighetsträning?

- Varför I o F?
- Mopeden
- Skolkrisen
- Breddad rekrytering
- Vad syftar I o F till -> anställningsbarhet om man frågar er...?
- För oss är det även minimera/maximera avhopp

MI

MI
Högskoleingenjör maskinteknik
Mechanical Engineering, bachelor
180hp

1

TMKT94 Ingenjören och CAD-verktyget — 6hp | 1 | 2 | G1
Introduction to CAD — Peter Hallberg

TMMI44 Termodynamik — 6hp | 2 | G1
Thermodynamics
Joakim Wren

TMMI04 Elektroteknik — 6hp | 3 | G1
Electrical Engineering
Sivert Lundgren

TAIU10 Analys i en variabel — 12hp | 4 | 4 | G1
Calculus, one variable, B. Sc. Course — Magnus Berggren

2

TMMI03 Mekanik — 8hp | 3 | 3 | G1
Engineering Mechanics — Jodkim Holmberg

TAIU05 Linjär algebra — 6hp | 4 | G1
Linear Algebra
Magnus Herberthson

TMMI70 Produktionsteknik — 6hp | 4 | G1
Production Engineering
Peter Bjurstam

TAIU07 Mat. beräkningar med MATLAB — 4hp | 1 | G1
Computations with MATLAB
Fredrik Berntsson

TSIU06 Industriella styrsystem — 6hp | 2 | G1
Automatic Control
Svante Gunnarsson

3

TMKT73 CAD fk — 6hp | 1 | 1 | G2
CAD, second course — Peter Hallberg

TSIU61 Reglerteknik — 6hp | 2 | G1
Automatic Control
Torkel Glad

TMMI13 Hydraulik och pneumatik — 6hp | 3 | G2
Hydraulics and Pneumatics
Liselott Ericson

TMMI69 Strömningslära & värmeöverf. — 6hp | 3 | G1
Fluid Mechanics and Heat Transfer
Ingrid Andersson

TMMI17 Hållfasthetslära — 6hp | 2 | G2
Solid Mechanics, Basic course
Daniel Leidermark

4

TMMI37 Finita elementmetoden, FEM — 6hp | 1 | 1 | G2
The Finite Element Method , FEM — Kjell Simonsson

TME101 Elkraftsteknik — 6hp | 2 | G1
Electrical Engineering
Per Öberg

TAIU06 Matematisk statistik — 6hp | 4 | G1
Mathematical Statistics
Xianfeng Yang

TMMI18 Konstruktionsmaterial — 6hp | 2 | G1
Engineering Materials
Ru Lin Peng

TMMI16 Maskinelement — 6hp | 3 | G2
Machine Elements
Peter Christensen

5

TMMI68 Cad och ritteknik fk — 6hp | 1 | 1 | G2
CAD and Drafting Techniques, Continued Course — Stefan Blomqvist

TAIU08 Flervariabelanalys — 6hp | 3 | G1
Calculus in Several Variables/
-

TEAE01 Industriell ekonomi, grundkurs — 6hp | 2 | G1
Industrial Economics, Basic Course
Sofi Rehme

TMMI19 Konstruktionsmetodik — 6hp | 1 | G2
Engineering Design Methodology
Jonas Detterfelt

TEI029 Ledarskap och organisation — 6hp | 4 | G1
Leadership and Organisation
Ingela Sölvell

6

TMMI53 Konstruktionsteknik - proj. — 12hp | 2 | G2
Engineering Design - Project
Simon Schütte

TGTU58 Introduktion till examensarbete — 2hp | 1 | G2
Communication
Gunilla Svemeskog Hedblom

Examensarbete — 16hp | A

LINKÖPINGS UNIVERSITET

TMKT94 Ingenjören & CAD-verktyget, 6hp

- Profilkurs för M och MI
- Även för
  - DPU (Design & Produktutveckling, 300hp)
  - EMM (Energi-Miljö-Management)
- Ca. 330 studenter
- Läses hela hösten

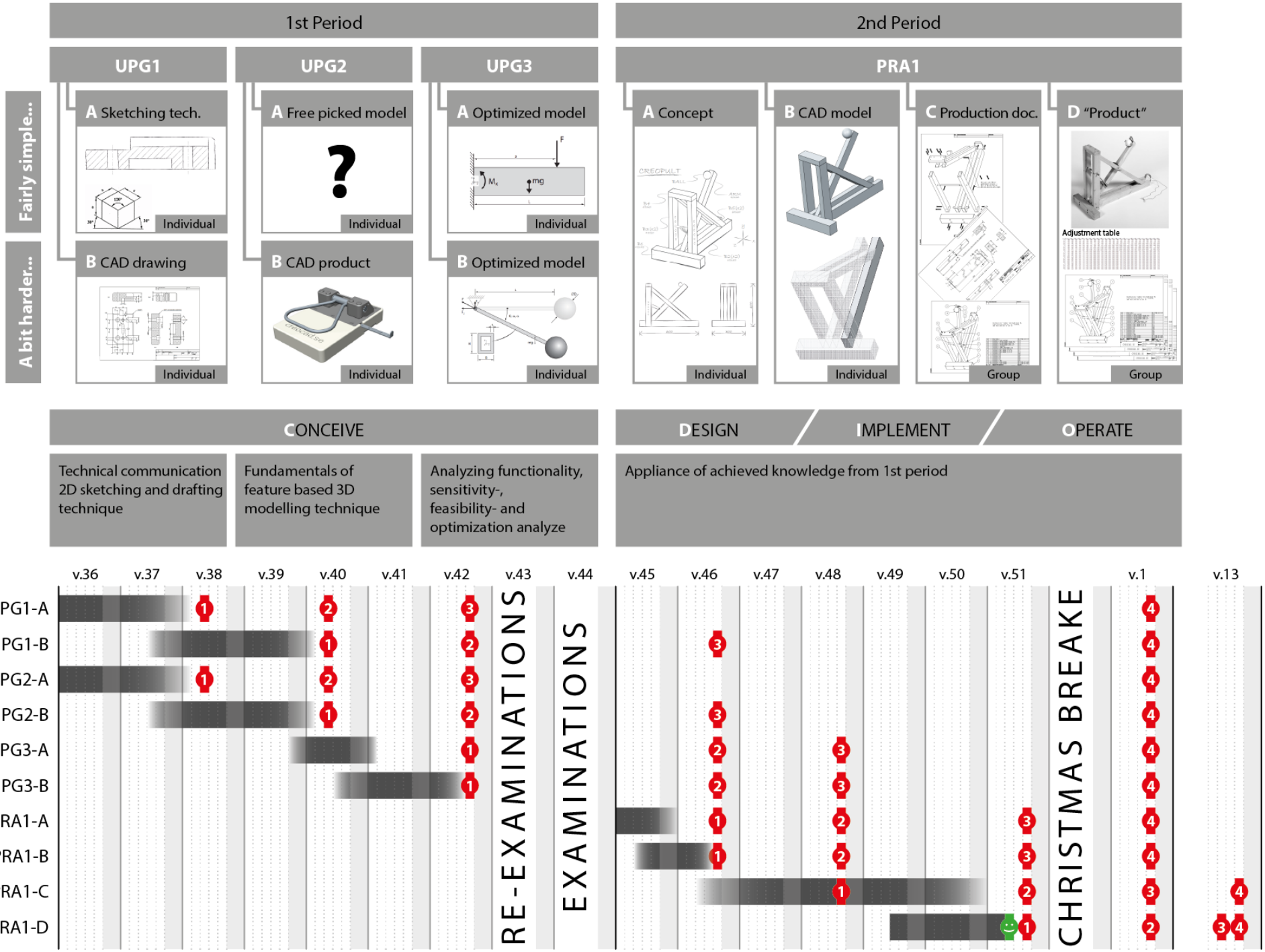
1st Period
2nd Period
UPG1
UPG2
UPG3
PRA1
Fairly simple...
A bit harder...
A Sketching tech.
Individual
A Free picked model
Individual
A Optimized model
Individual
B CAD drawing
Individual
B CAD product
Individual
B Optimized model
Individual
A Concept
Individual
B CAD model
Individual
C Production doc.
Group
D "Product"
Adjustment table
Group
CONCEIVE
DESIGN
IMPLEMENT
OPERATE
Technical communication 2D sketching and drafting technique
Fundamentals of feature based 3D modelling technique
Analyzing functionality, sensitivity-, feasibility- and optimization analyze
Appliance of achieved knowledge from 1st period
v.36
v.37
v.38
v.39
v.40
v.41
v.42
v.43
v.44
v.45
v.46
v.47
v.48
v.49
v.50
v.51
v.1
v.13
UPG1-A
UPG1-B
UPG2-A
UPG2-B
UPG3-A
UPG3-B
PRA1-A
PRA1-B
PRA1-C
PRA1-D
RE-EXAMINATIONS
EXAMINATIONS
CHRISTMAS BREAKE

Linköping University
INSTITUTE OF TECHNOLOGY
GRANSKNINGSINTYG VID KAMRATVÄRDERING
Granskat moment
Kurskod
TMKT94
Termin
HT2015
Provkod (UPG1-3 A/B, PRA1 A-B)
Granskad student / grupp
Förnamn Efternamn (texta)
Födelsedag (ÅÅMMDD)
LIU-ID
Prog./Klass
Grupp
Granskad av
Förnamn Efternamn (texta)
Födelsedag (ÅÅMMDD)
LIU-ID
Klass
Grupp
Kommentarer
Ansvarig lärare / assistent / mottagare
Förnamn Efternamn
Underskrifter (ange även datum)
Granskad student
Granskad av
Genom att underteckna granskningsprotokollet intygar den granskade studenten att eventuella av kurskamraten (granskaren) påtalade fel och brister hörsammats och korrigerats efter bästa förmåga.
Genom att underteckna granskningsprotokollet intygar den granskande studenten att
1. kurskamraten (den granskade), till synes efter bästa förmåga, tillmötesgått kraven för den specificerade inlämningsuppgiften
2. att funna fel och brister påtalats.
UPG1
Lite lättare...
Lite svårare...
A Handritning
Individuell
B CAD-ritning
Individuell
D Fysisk modell
Skjutdatatabell
Gruppvis
Gruppvis
v.36
v.37
v.50
v.51
v.1
v.13
UPG1-A
UPG1-B
UPG2-A
UPG2-B
UPG3-A
UPG3-B
PRA1-A
PRA1-B
PRA1-C
PRA1-D
JULUPPEHÅLL

Syllabus overview (2/5)

- **Individual assignment 1 & 2**: Basic modeling technique, drafting and parametrization (UPG1 & UPG2)

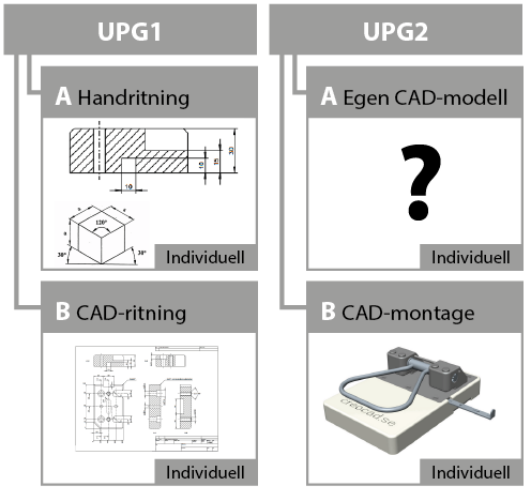

A4 European hole pattern

Trio hole pattern

Syllabus overview (3/5)

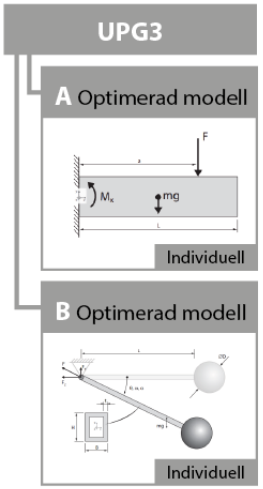

- **Individual assignment 3**:
  Analyzing mechanisms, sensitivity-, feasibility- and optimization analysis

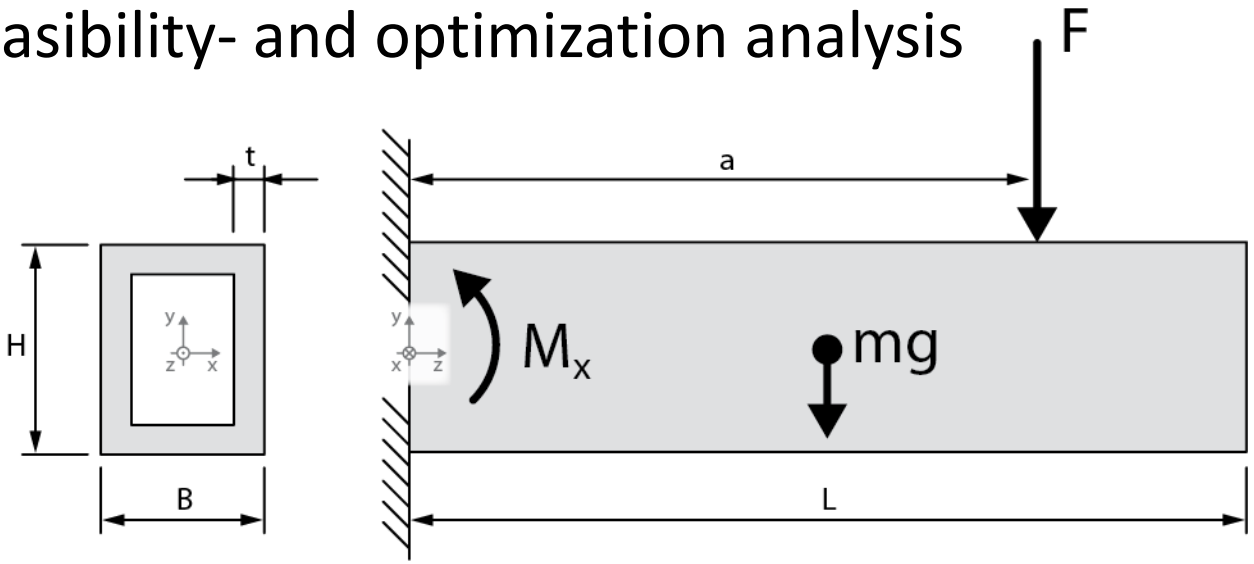

$$|M_x| = Fa + mg\left(\frac{L}{2}\right) \qquad I_x = \frac{BH^3 - (B-2t)(H-2t)^3}{12} \qquad S_{z\,max} = \frac{M_x \cdot y_{max}}{I_x}$$

Syllabus overview (4/5)

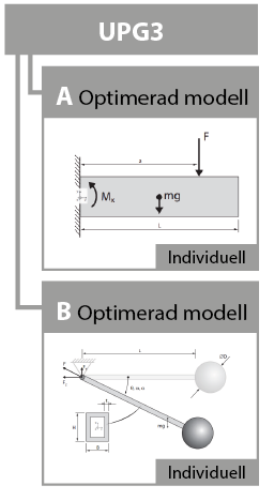

- **Individual assignment 3**:Analyzing mechanisms, sensitivity-, feasibility- and optimization analysis

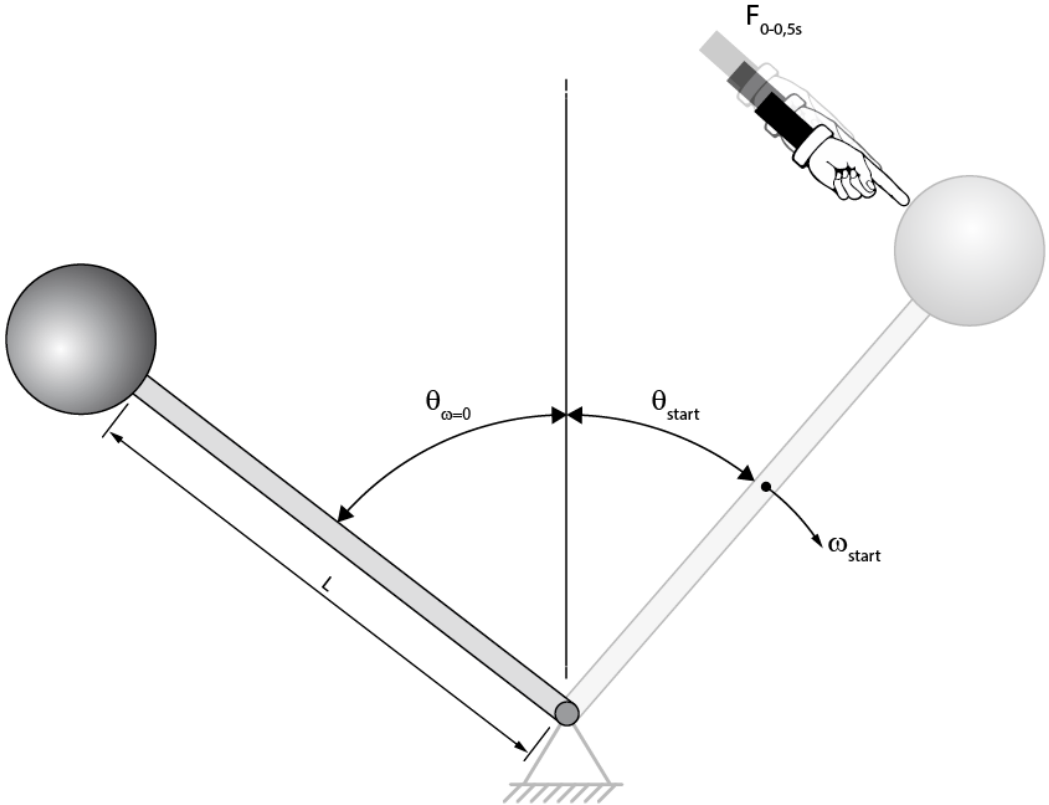

Syllabus overview (5/5)

- **Project assignment**:
  Hands-on module that summarizes the previous modules
- Explore the connection between the digital model and its physical counterpart!

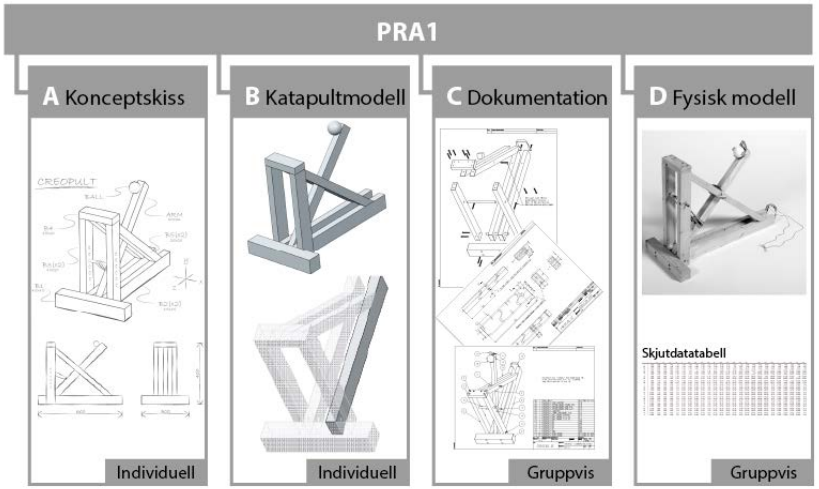

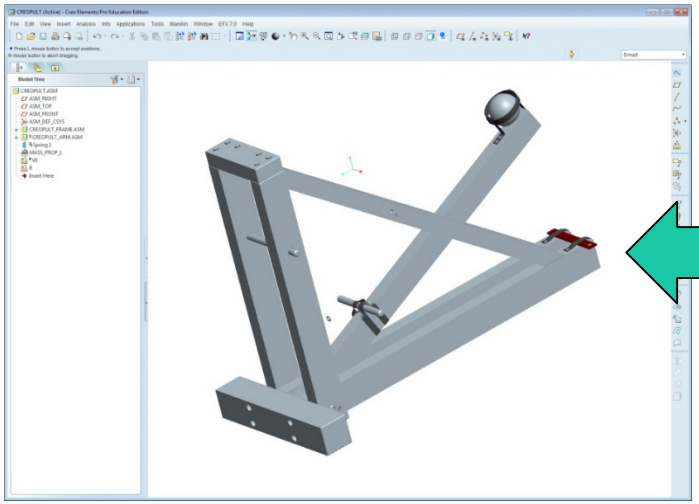

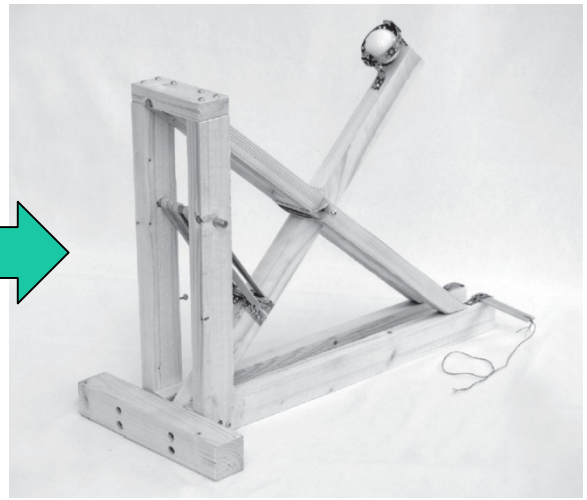

Why build something?

- Learning Theory
- Kolb's learning cycle – learning by doing

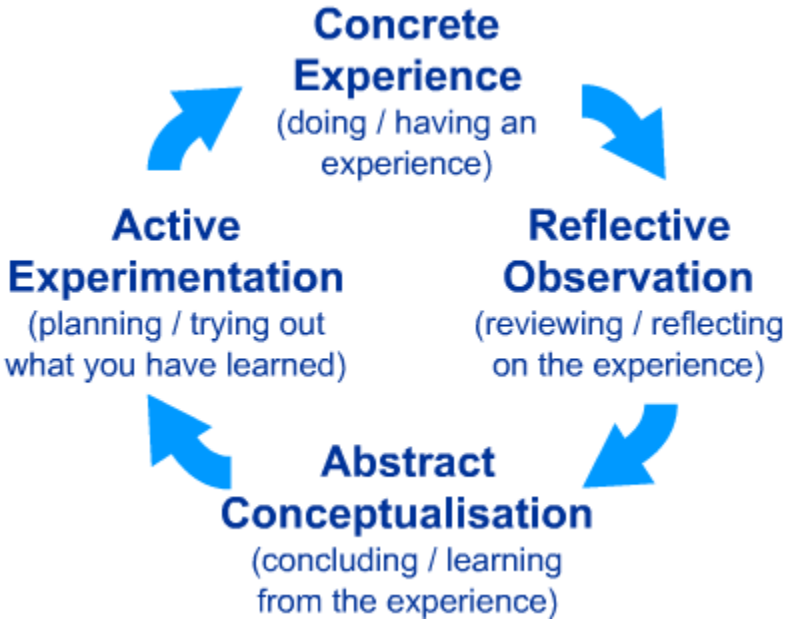

The hands-on module (1/12)

The challenge!

$$Poäng = 150000 - \frac{15(m + 10K)}{1 + T_1 + 2T_2 + 4T_3}$$

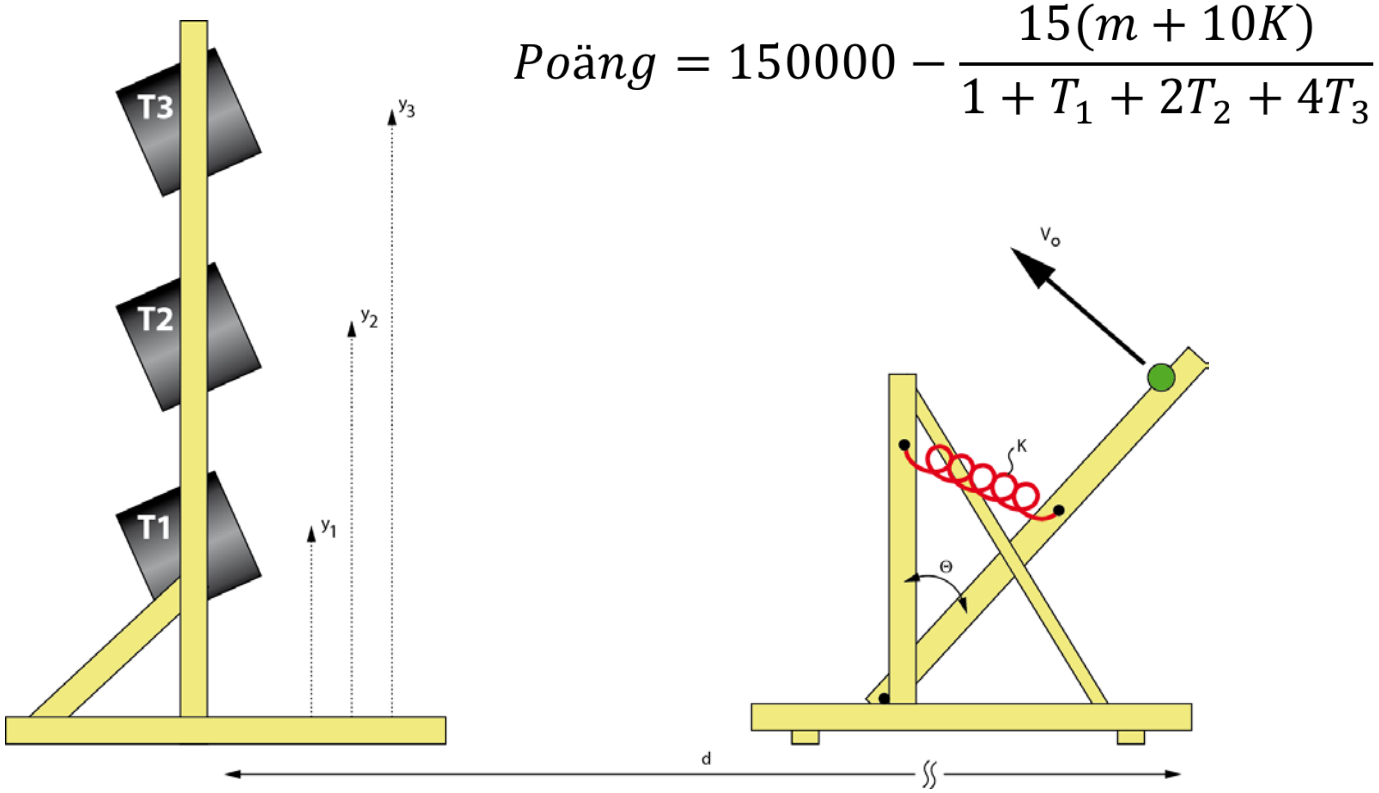

Available tools

Available materials

The hands-on module (3/12)

- Emphasis on a systematic approach with proper preparations

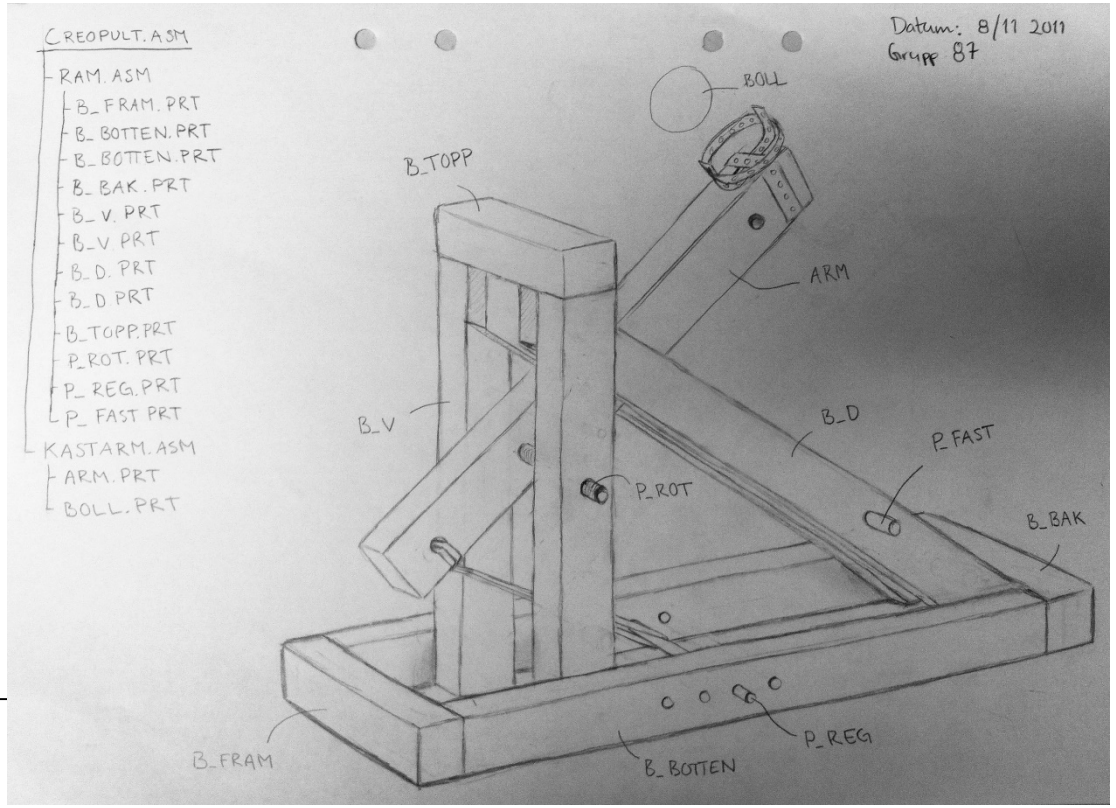

The hands-on module (4/12)

- Investigate and determine necessary inputs

$$k = \frac{F}{x} = \frac{9{,}23}{0{,}23 - 0{,}15} \approx 115\ N/m$$

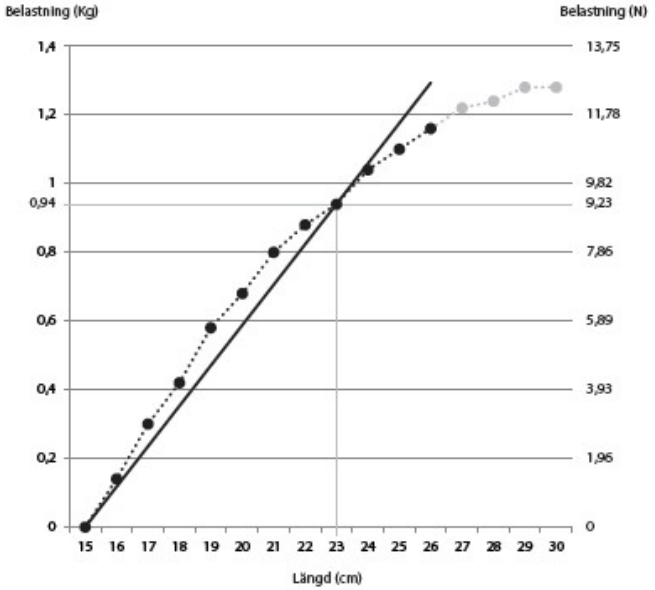

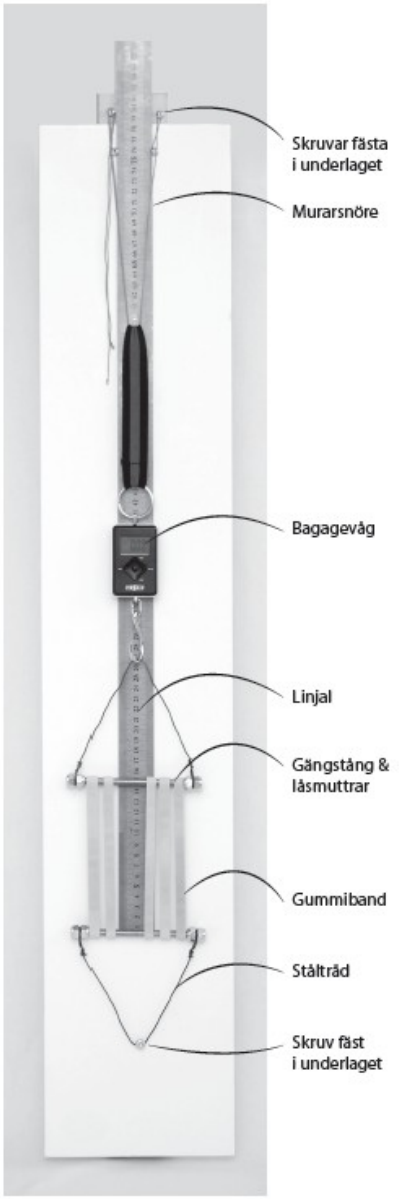

The hands-on module (5/12)

- Digital modeling - defining a model structure and necessary parameter respect

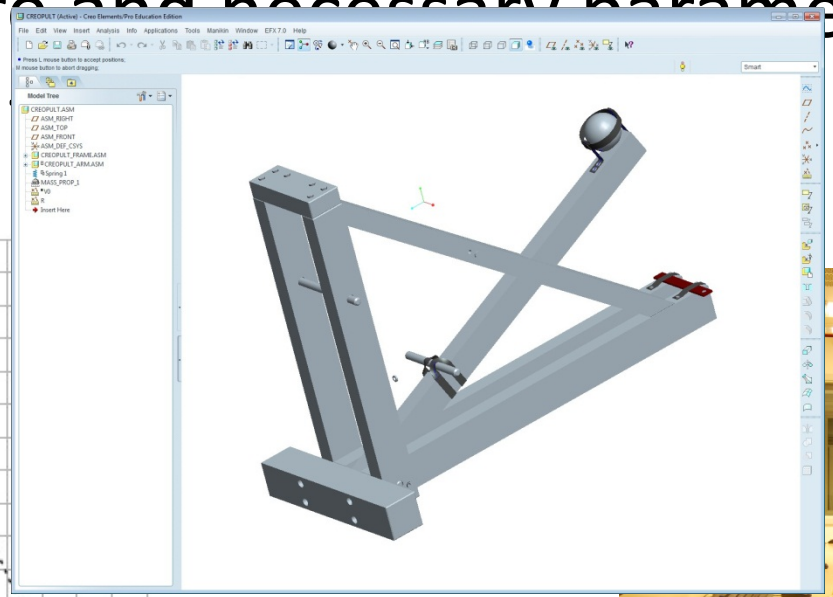

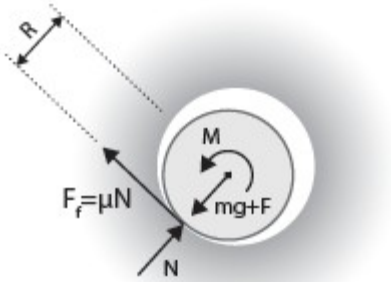

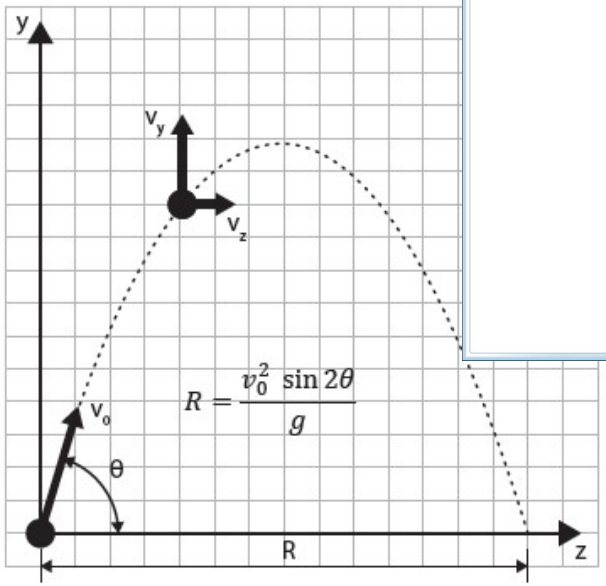

The hands-on module (6/12)

- Deal with the unexpected…

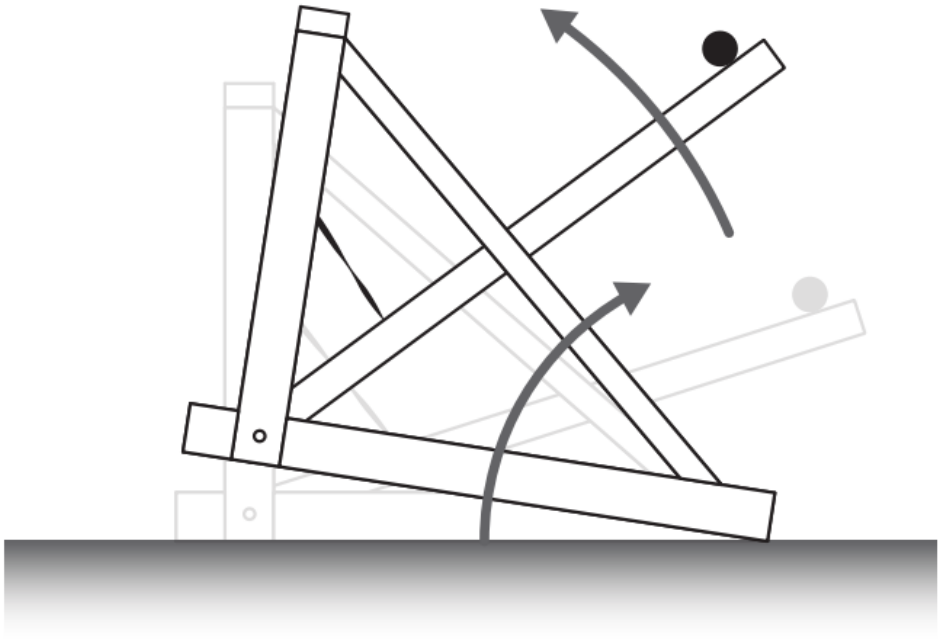

The hands-on module (7/12)

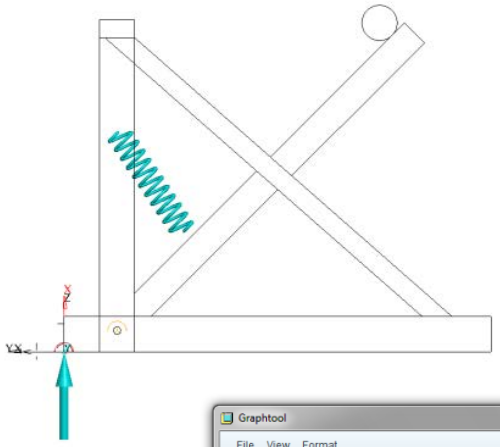

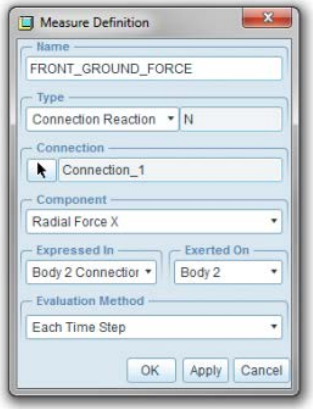

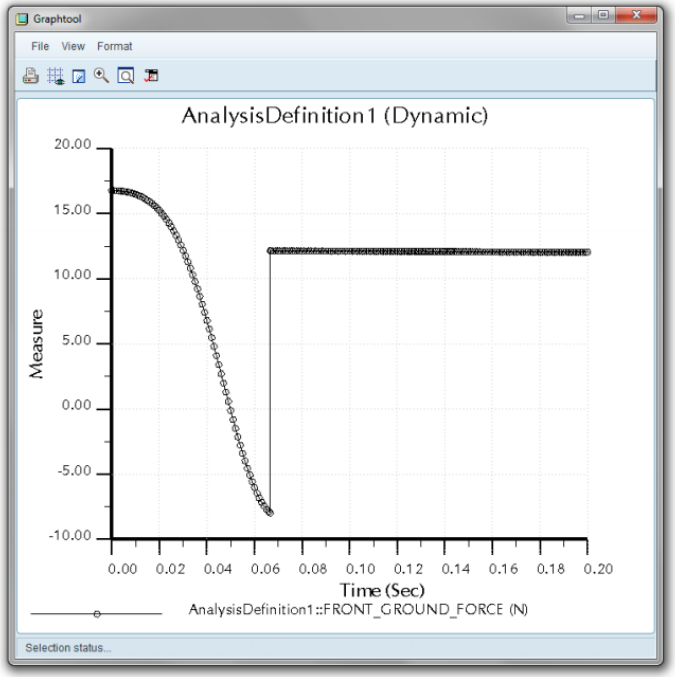

The hands-on module (8/12)

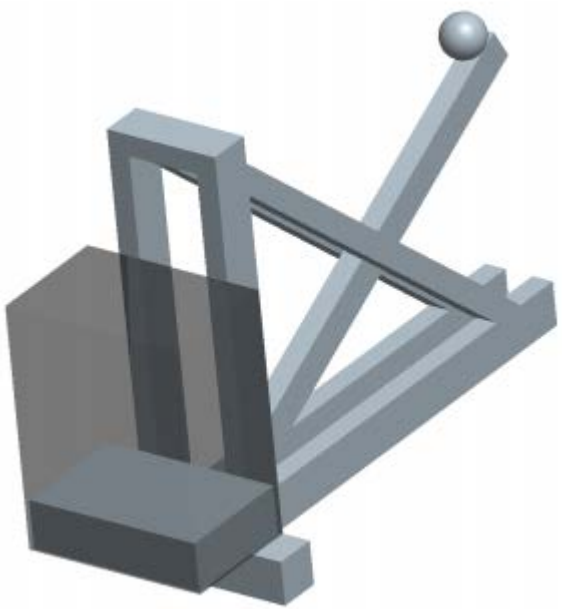

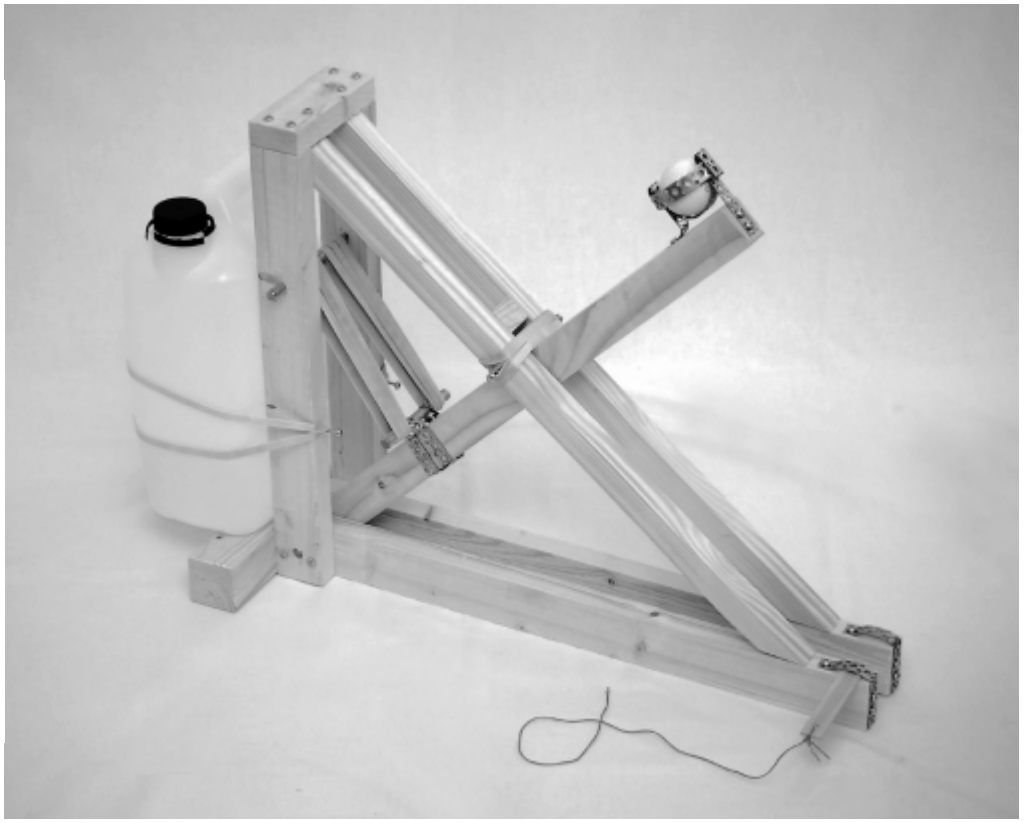

The hands-on module (9/12)

- Analyze and optimization

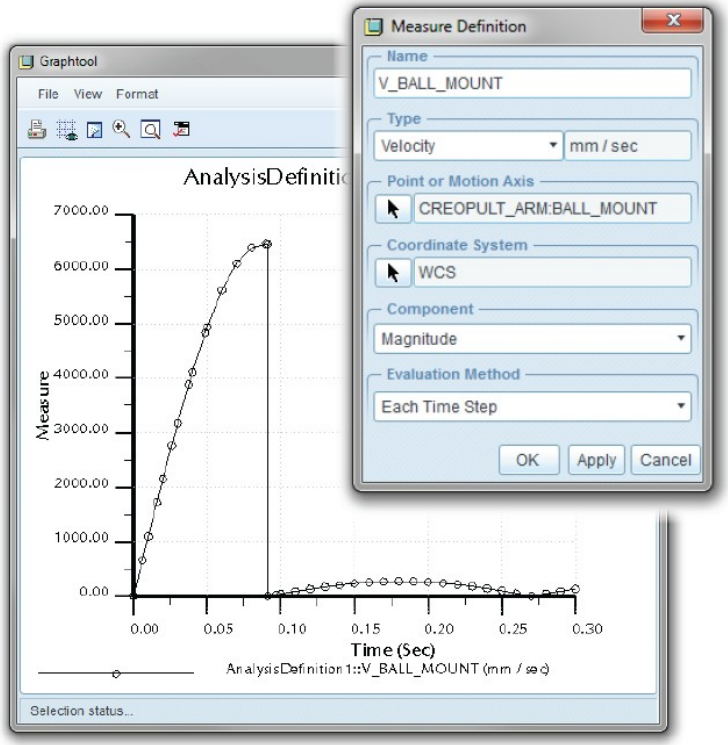

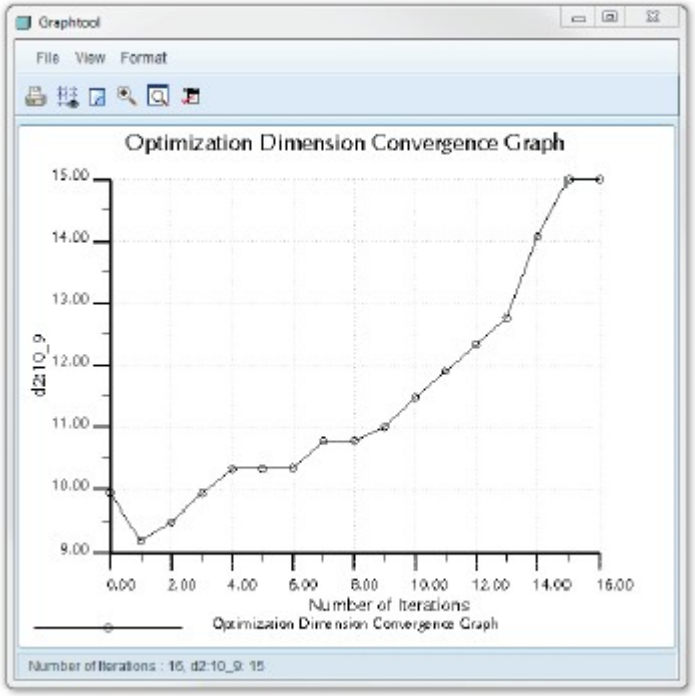

The hands-on module (10/12)

- Documentation and realization

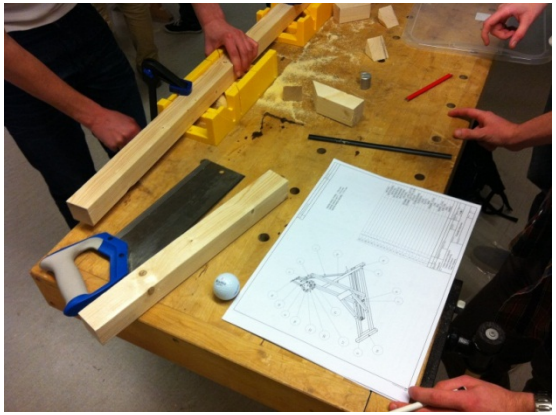

The hands-on module (11/12)

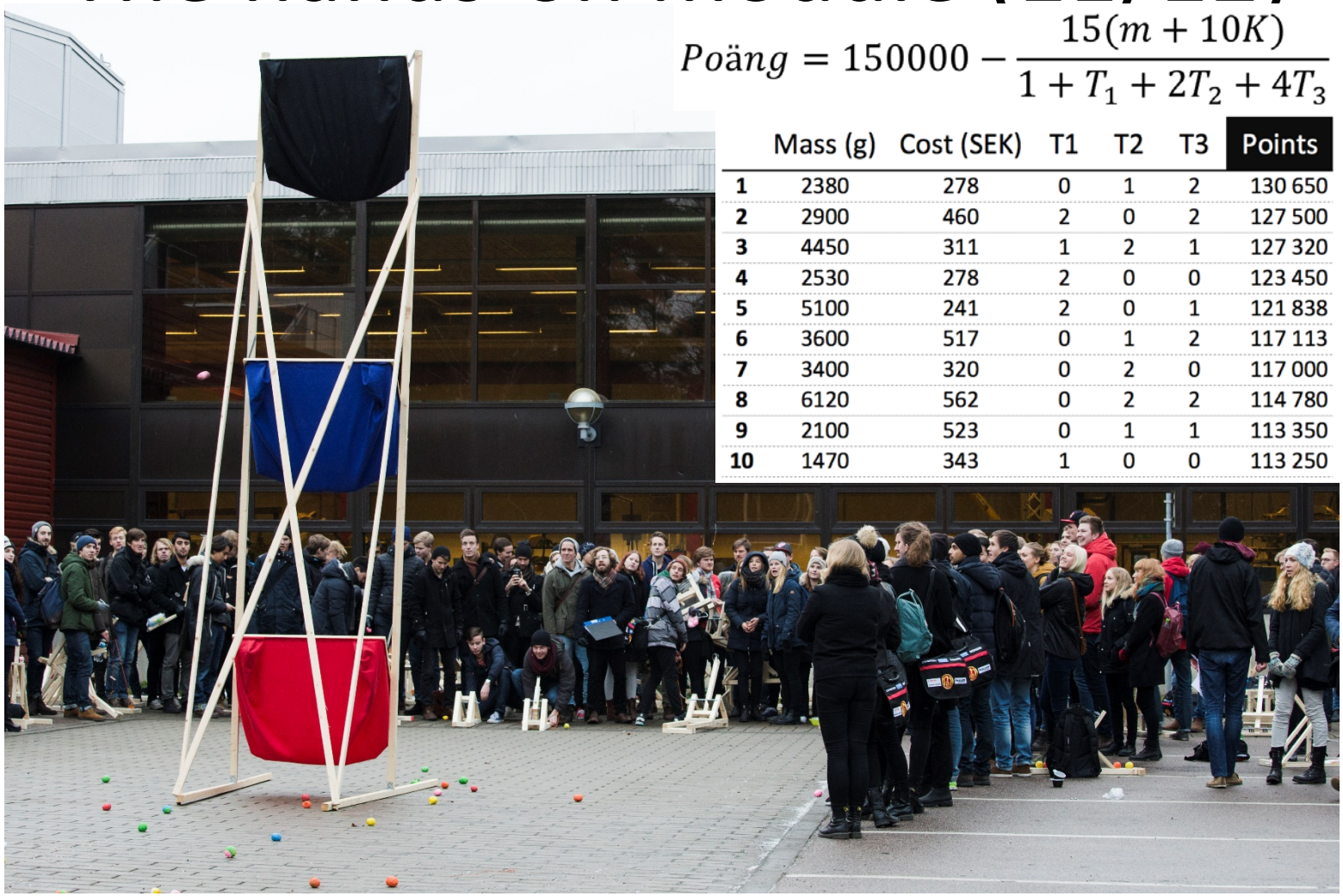

$$Poäng = 150000 - \frac{15(m + 10K)}{1 + T_1 + 2T_2 + 4T_3}$$

	Mass (g)	Cost (SEK)	T1	T2	T3	Points
1	2380	278	0	1	2	130 650
2	2900	460	2	0	2	127 500
3	4450	311	1	2	1	127 320
4	2530	278	2	0	0	123 450
5	5100	241	2	0	1	121 838
6	3600	517	0	1	2	117 113
7	3400	320	0	2	0	117 000
8	6120	562	0	2	2	114 780
9	2100	523	0	1	1	113 350
10	1470	343	1	0	0	113 250

The hands-on module (12/12)

Key observations (1/3)

- Strong and obviously beneficial connection to learning theory and experiential learning …and the CDIO initiative!

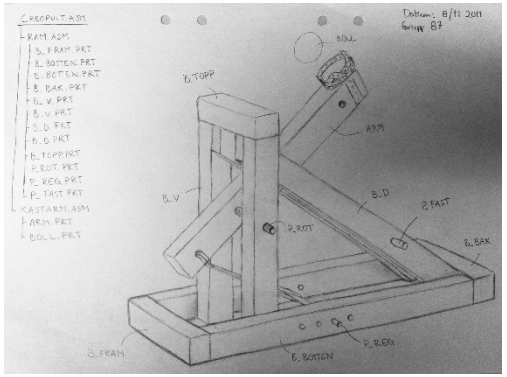

Key observations (2/3)

Emotional engagement looks different when going physical…

Key observations (3/3)

- Less *is* more!
- A challenge is …challenging!
- Accuracy and linearity is a digital thing!
- A digital model calls for simplifications when used for analyzing
- Seeing is believing! (…and understanding of the digital model)

MI

MI
Högskoleingenjör maskinteknik
Mechanical Engineering, bachelor
180hp

1

TMKT94 Ingenjören och CAD-verktyget — 6hp | 1 | 2 | G1
Introduction to CAD — Peter Hallberg

TMMI44 Termodynamik — 6hp | 2 | G1
Thermodynamics
Joakim Wren

TMMI04 Elektroteknik — 6hp | 3 | G1
Electrical Engineering
Sivert Lundgren

TAIU10 Analys i en variabel — 12hp | 4 | 4 | G1
Calculus, one variable, B. Sc. Course — Magnus Berggren

2

TMMI03 Mekanik — 8hp | 3 | 3 | G1
Engineering Mechanics — Jodkim Holmberg

TAIU05 Linjär algebra — 6hp | 4 | G1
Linear Algebra
Magnus Herberthson

TMMI70 Produktionsteknik — 6hp | 4 | G1
Production Engineering
Peter Bjurstam

TAIU07 Mat. beräkningar med MATLAB — 4hp | 1 | G1
Computations with MATLAB
Fredrik Berntsson

TSIU06 Industriella styrsystem — 6hp | 2 | G1
Automatic Control
Svante Gunnarsson

3

TMKT73 CAD fk — 6hp | 1 | 1 | G2
CAD, second course — Peter Hallberg

TSIU61 Reglerteknik — 6hp | 2 | G1
Automatic Control
Torkel Glad

TMMI13 Hydraulik och pneumatik — 6hp | 3 | G2
Hydraulics and Pneumatics
Liselott Ericson

TMMI69 Strömningslära & värmeöverf. — 6hp | 3 | G1
Fluid Mechanics and Heat Transfer
Ingrid Andersson

TMMI17 Hållfasthetslära — 6hp | 2 | G2
Solid Mechanics, Basic course
Daniel Leidermark

4

TMMI37 Finita elementmetoden, FEM — 6hp | 1 | 1 | G2
The Finite Element Method , FEM — Kjell Simonsson

TME101 Elkraftsteknik — 6hp | 2 | G1
Electrical Engineering
Per Öberg

TAIU06 Matematisk statistik — 6hp | 4 | G1
Mathematical Statistics
Xianfeng Yang

TMMI18 Konstruktionsmaterial — 6hp | 2 | G1
Engineering Materials
Ru Lin Peng

TMMI16 Maskinelement — 6hp | 3 | G2
Machine Elements
Peter Christensen

5

TMMI68 Cad och ritteknik fk — 6hp | 1 | 1 | G2
CAD and Drafting Techniques, Continued Course — Stefan Blomqvist

TAIU08 Flervariabelanalys — 6hp | 3 | G1
Calculus in Several Variables/
-

TEAE01 Industriell ekonomi, grundkurs — 6hp | 2 | G1
Industrial Economics, Basic Course
Sofi Rehme

TMMI19 Konstruktionsmetodik — 6hp | 1 | G2
Engineering Design Methodology
Jonas Detterfelt

TEI029 Ledarskap och organisation — 6hp | 4 | G1
Leadership and Organisation
Ingela Sölvell

6

TMMI53 Konstruktionsteknik - proj. — 12hp | 2 | G2
Engineering Design - Project
Simon Schütte

TGTU58 Introduktion till examensarbete — 2hp | 1 | G2
Communication
Gunilla Svemeskog Hedblom

Examensarbete — 16hp | A

LINKÖPINGS UNIVERSITET

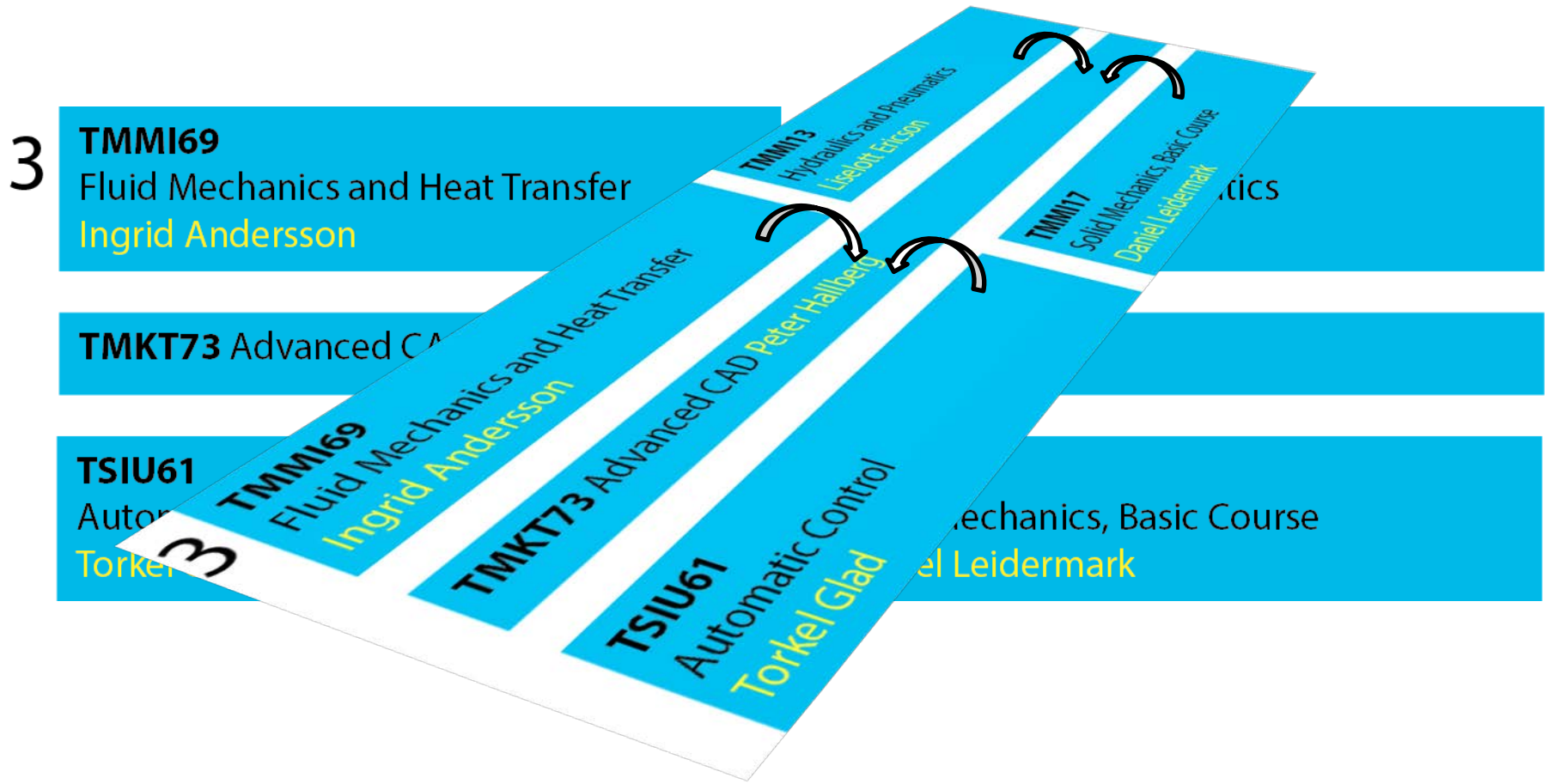
3
TMMI69
Fluid Mechanics and Heat Transfer
Ingrid Andersson
TMKT73 Advanced C
TSIU61
Auto
Torke
ics
echanics, Basic Course
el Leidermark
3
TMMI69
Fluid Mechanics and Heat Transfer
Ingrid Andersson
TMKT73 Advanced CAD Peter Hallberg
TSIU61
Automatic Control
Torkel Glad
TMMI13
Hydraulics and Pneumatics
Liselott Ericson
TMMI17
Solid Mechanics, Basic Course
Daniel Leidermark

TMKT73 CAD fk.

- Fortsättningskurs för Maskiningenjörsprogrammet (180hp)
- Ca 70 studenter i åk2

TMKT73 CAD fk. - översikt

- Avancerad modelleringsteknik
- Familjetabeller
- Program
- Skelett
- Rörliga skelett
- UDF
- PLM/PDM med Windchill
- Sammanfattande projekt

TMKT73 CAD fk. - projektet

- Scenario: ”Huvudleverantör vill kontraktera underleverantör”
- Examination
  - Avstämningar
  - Produkt i Windchill
  - Muntlig redovisning

TMKT73 - Projektöversikt

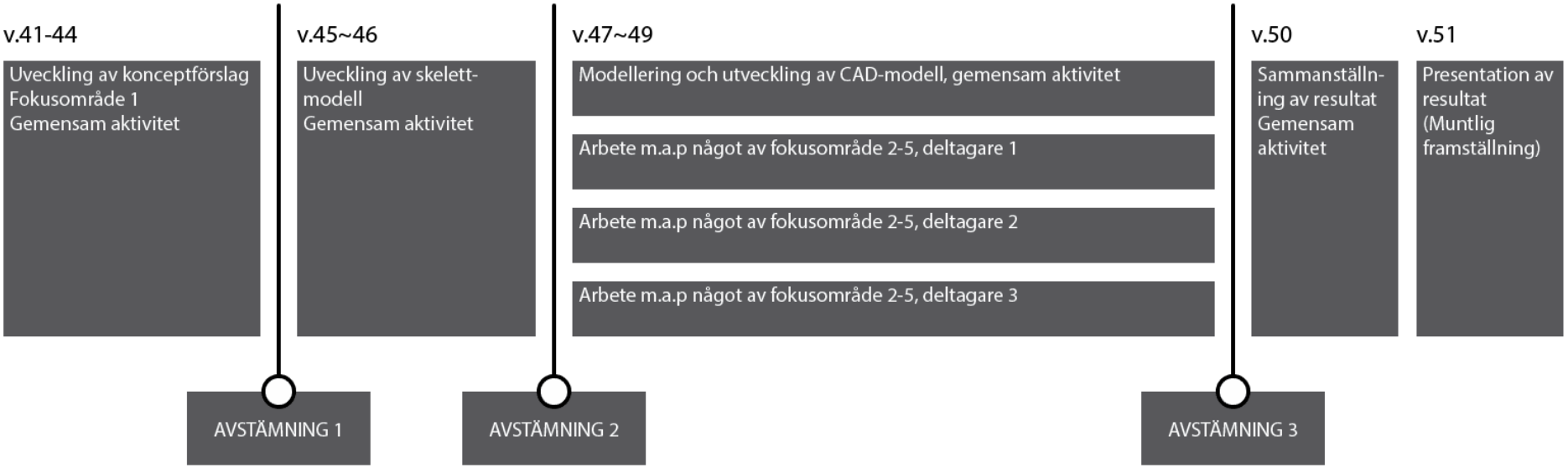

CARGO BIKE
PEDEGO

GUSTO Coca-Cola
ZERO ZUCCHERO
IT'S POSSIBLE

REAR MODULE
RnD by Nikola Motors
Main interface set by NM

FRONT MODULE
RnD by sub-contractor
General req. set by NM

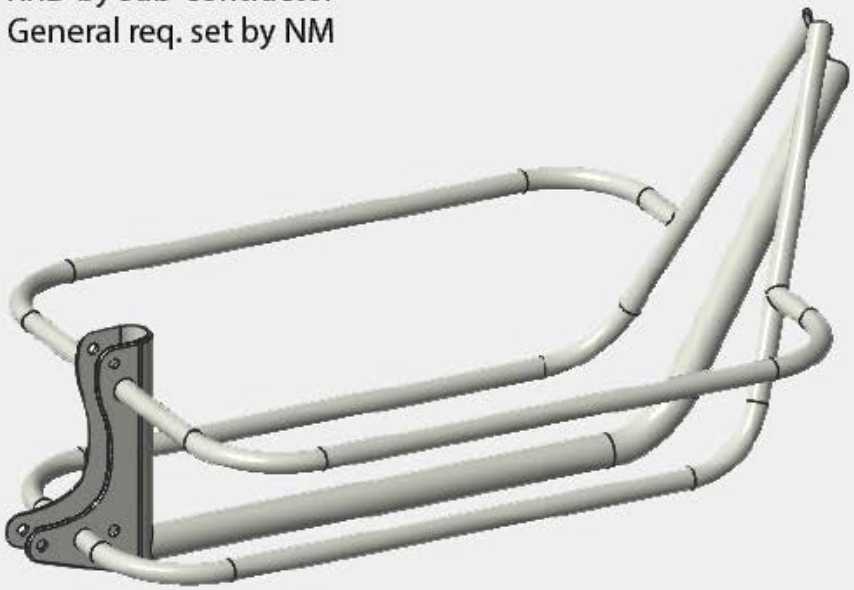

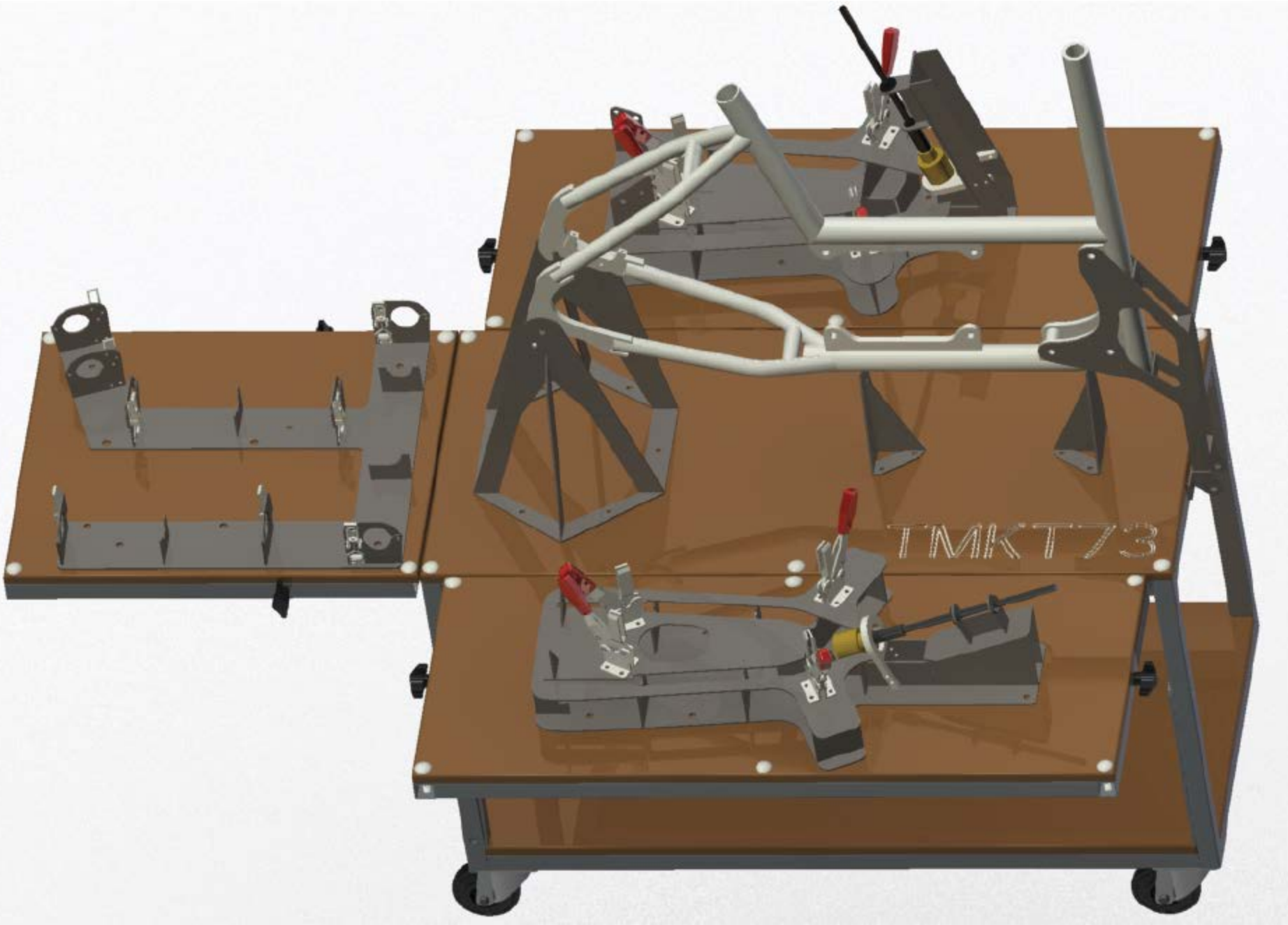
TMKT73

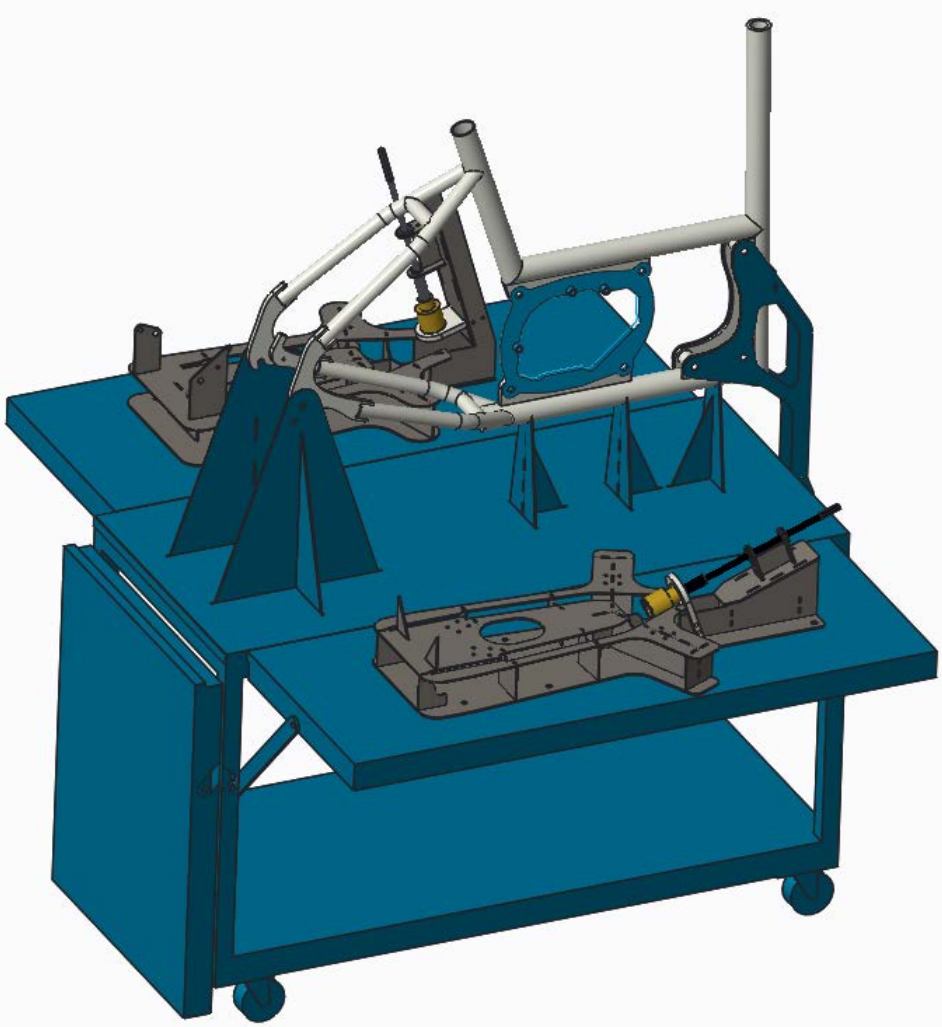

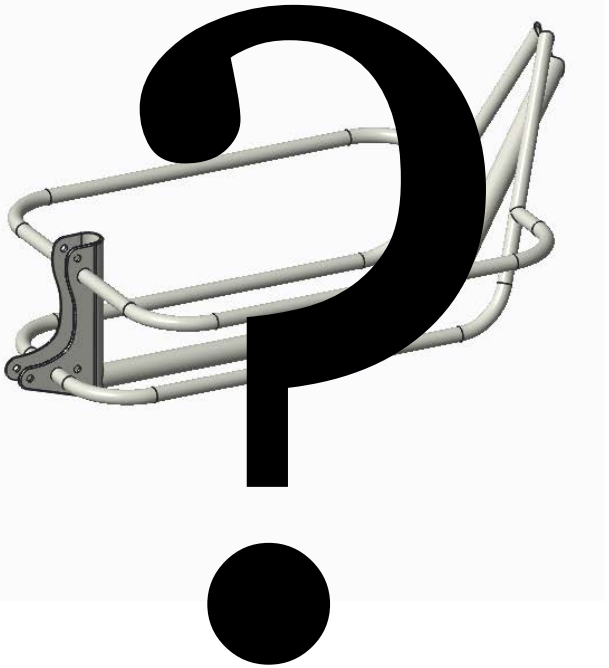

PTC Creo Parametric Educational Edition

File | Home

New | Open | Open Last Session | Select Working Directory | Erase Not Displayed | Model Display | System Colors | Play Trail File

Data | Settings | Utilities

Common Folders

- In Session
- Windchill Cabinets
- Workspace
- Desktop
- My Documents
- petha98-t3500
- Working Directory
- Network Neighborhood
- Manikin Library
- Favorites

Folder Tree

http://windchill.iei.liu.se/windchill/app/#ptc1/tcomp/infoPage?oid=VR%3Awt.epm.EPMDocument%3A4521811&ContainerOid=OR%3Awt.pdmlink.PDMLinkProduct%3A4521410&u8=1

Assembly - cargobike_ng.asm, A.41 | PARTcommunity 2D/3D Models | 3DModelSpace

PTC Windchill
petha98

Part, Document, CAD D... | Search . . . | Quick Links

Search | Browse

Products > CargoBikeNG > Folders

Recently Accessed

Actions | Assembly - **cargobike_ng.asm, A.41** | In Work

Details | Structure | Content | Related Objects | Changes | History | Traceability | Relationship Explorer

Visualization and Attributes | More Attributes

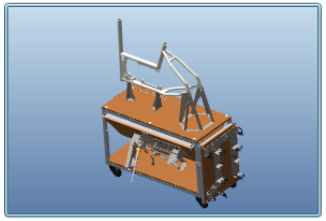

Visualization and Attributes

File Name:	cargobike_ng.asm
Number:	CARGOBIKE_NG.ASM
Name:	cargobike_ng.asm
Status:	Checked in
Modified By:	Daniel
Last Modified:	2015-10-12 09:49 CEST

General

Version:	A.41	Generic:	No
Authoring Application:	Creo	Instance:	No
Type:	CAD Document	Missing Dependents:	No
Document Category:	Assembly	Incomplete Object:	No
Document Subcategory:		Description:	
Checkin Comments:			

System

Context:	CargoBikeNG	Location:	/CargoBikeNG
Created By:	Daniel	State:	In Work - Released - Canceled
Created On:	2015-06-16 07:44 CEST	Life Cycle Template:	Basic

Navigator

- Sensitivity calculation: 90% done.
- Sensitivity calculation: 95% done.
- Sensitivity calculation: 100% done.
- Sensitivity calculation completed.
- Regained floating license; you can resume working.
- Base window cannot be closed.
- Regained floating license; you can resume working.

CARGOBIKE_NG Rev: A.41 In Work (Active) - PTC Creo Parametric Educational Edition

File | Model | Analysis | Annotate | Render | Manikin | Tools | View | Applications | Framework

Regenerate | Copy | Paste | Delete | User-Defined Feature | Copy Geometry | Shrinkwrap | Assemble | Create | Repeat | Drag Components | Plane | Axis | Point | Coordinate System | Sketch | Hole | Extrude | Revolve | Pattern | Manage Views | Section | Appearance Gallery | Exploded View | Toggle Status | Edit Position | Display Style | Component Interface | Publish Geometry | Family Table | Parameters | Switch Dimensions | Relations | Bill of Materials | Reference Viewer

Operations | Get Data | Component | Datum | Cut & Surface | Modifiers | Model Display | Model Intent | Investigate

Model Tree

- CARGOBIKE_NG.ASM
  - CARGOBIKE_NG_MOTION_SKEL.ASM
    - CARGOBIKE_NG_REAR_DESIGN_SKEL.PRT
    - CARGOBIKE_NG_FRONT_DESIGN_SKEL.PRT
    - REAR_JIG_DESIGN_SKEL.PRT
    - FRONT_JIG_DESIGN_SKEL.PRT
    - CHAINSTAYS_FIXTURE_DESIGN_SKEL.PRT
    - SEATSTAYS_FIXTURE_DESIGN_SKEL.PRT
    - REAR_FRAME_FIXTURE_DESIGN_SKEL.PRT
    - FRAME_BODY_SKEL.PRT
    - FRONT_FRAME_BODY_SKEL.PRT
    - ENGINE_MODULE_BODY_SKEL.PRT
    - PEDAL_MODULE_BODY_SKEL.PRT
    - SEAT_STEM_BODY_SKEL.PRT
    - STEERING_STEM_BODY_SKEL.PRT
    - REAR_TABLE_MAIN.PRT
    - SIDE_EXTENTION_RIGHT.PRT
    - SIDE_EXTENTION_LEFT.PRT
    - REAR_EXTENSION.PRT
    - SUPPORT_BRACKET_RIGHT_EXT.PRT
    - CHAINSTAYS_FIXTURE_BODY_SKEL.PRT
    - CHAINSTAYS_NOTCH_BODY_SKEL.PRT
    - SEATSTAYS_FIXTURE_BODY_SKEL.PRT
    - SEATSTAYS_NOTCH_BODY_SKEL.PRT
    - REAR_INTERFACE_FIXTURE_ARM.PRT
    - REAR_FRAME_FIXTURE_BODY_SKEL.PRT
    - REAR_FRAME_FIXTURE_CLAP_BODY_SK.PRT
  - REAR_FRAME.ASM
  - MANUFACTURING_TOOLS.ASM
  - REAR_TABLE.ASM
    - REAR_TABLE_BOARD_TOP_PART.PRT
    - REAR_TABLE_BOARD_BOTTOM_PART.PRT
    - REAR_TABLE_BOARD_RIGHT.PRT
    - REAR_TABLE_BOARD_LEFT_PART.PRT
    - REAR_TABLE_BOARD_REAR_PART.PRT
    - REAR_TABLE_FR_LEG_PART.PRT
    - REAR_TABLE_RR_LEG_PART.PRT

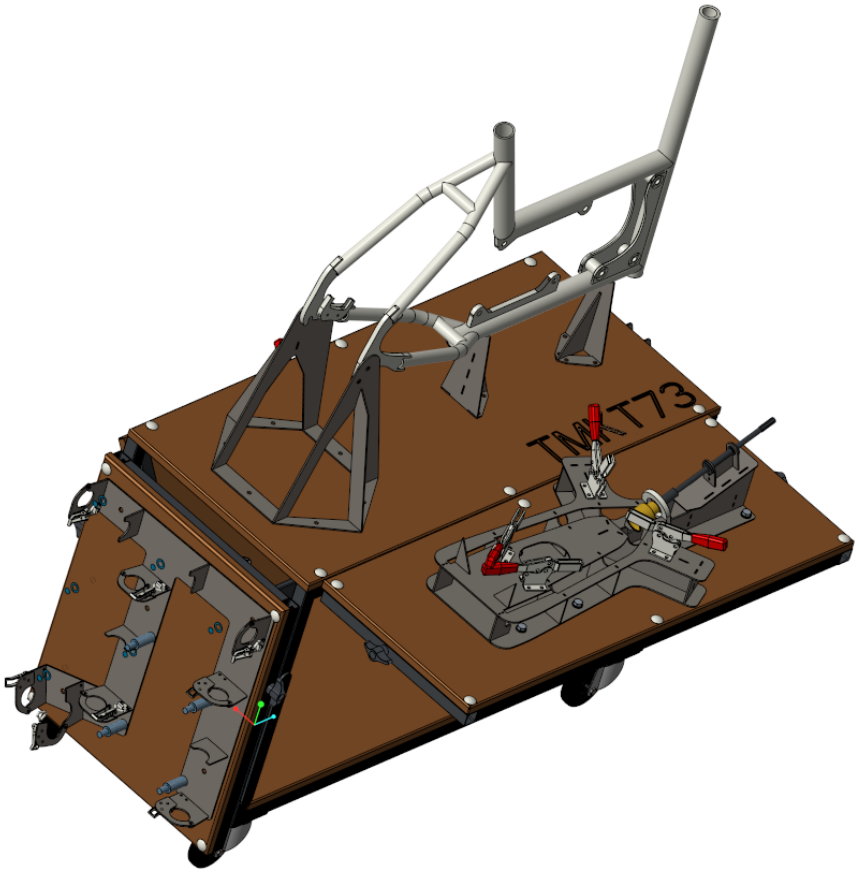

- Regenerating REAR_TABLE_FLEX_PIPE_NO_HOLES feature 6 out of 8 ...
- RFF_BOTTOM_PLATE regeneration completed successfully.
- Failure to assemble based on current connection definition.
- LEFT_SUPPORT_PLATE_REAR_WHEEL regeneration completed successfully.
- Regenerating REAR_TABLE_BOARD_TOP_PART feature 9 out of 9 ...
- REAR_TABLE_WIDTH_PIPE_FRONT_TOP regeneration completed successfully.
- Automatic regeneration of the parts has been completed.

Smart

MI

MI
Högskoleingenjör maskinteknik
Mechanical Engineering, bachelor
180hp

1

TMKT94 Ingenjören och CAD-verktyget — 6hp | 1 | 2 | G1
Introduction to CAD — Peter Hallberg

TMMI44 Termodynamik — 6hp | 2 | G1
Thermodynamics
Joakim Wren

TMMI04 Elektroteknik — 6hp | 3 | G1
Electrical Engineering
Sivert Lundgren

TAIU10 Analys i en variabel — 12hp | 4 | 4 | G1
Calculus, one variable, B. Sc. Course — Magnus Berggren

2

TMMI03 Mekanik — 8hp | 3 | 3 | G1
Engineering Mechanics — Jodkim Holmberg

TAIU05 Linjär algebra — 6hp | 4 | G1
Linear Algebra
Magnus Herberthson

TMMI70 Produktionsteknik — 6hp | 4 | G1
Production Engineering
Peter Bjurstam

TAIU07 Mat. beräkningar med MATLAB — 4hp | 1 | G1
Computations with MATLAB
Fredrik Berntsson

TSIU06 Industriella styrsystem — 6hp | 2 | G1
Automatic Control
Svante Gunnarsson

3

TMKT73 CAD fk — 6hp | 1 | 1 | G2
CAD, second course — Peter Hallberg

TSIU61 Reglerteknik — 6hp | 2 | G1
Automatic Control
Torkel Glad

TMMI13 Hydraulik och pneumatik — 6hp | 3 | G2
Hydraulics and Pneumatics
Liselott Ericson

TMMI69 Strömningslära & värmeöverf. — 6hp | 3 | G1
Fluid Mechanics and Heat Transfer
Ingrid Andersson

TMMI17 Hållfasthetslära — 6hp | 2 | G2
Solid Mechanics, Basic course
Daniel Leidermark

4

TMMI37 Finita elementmetoden, FEM — 6hp | 1 | 1 | G2
The Finite Element Method , FEM — Kjell Simonsson

TME101 Elkraftsteknik — 6hp | 2 | G1
Electrical Engineering
Per Öberg

TAIU06 Matematisk statistik — 6hp | 4 | G1
Mathematical Statistics
Xianfeng Yang

TMMI18 Konstruktionsmaterial — 6hp | 2 | G1
Engineering Materials
Ru Lin Peng

TMMI16 Maskinelement — 6hp | 3 | G2
Machine Elements
Peter Christensen

5

TMMI68 Cad och ritteknik fk — 6hp | 1 | 1 | G2
CAD and Drafting Techniques, Continued Course — Stefan Blomqvist

TAIU08 Flervariabelanalys — 6hp | 3 | G1
Calculus in Several Variables/
-

TEAE01 Industriell ekonomi, grundkurs — 6hp | 2 | G1
Industrial Economics, Basic Course
Sofi Rehme

TMMI19 Konstruktionsmetodik — 6hp | 1 | G2
Engineering Design Methodology
Jonas Detterfelt

TEI029 Ledarskap och organisation — 6hp | 4 | G1
Leadership and Organisation
Ingela Sölvell

6

TMMI53 Konstruktionsteknik - proj. — 12hp | 2 | G2
Engineering Design - Project
Simon Schütte

TGTU58 Introduktion till examensarbete — 2hp | 1 | G2
Communication
Gunilla Svemeskog Hedblom

Examensarbete — 16hp | A

LINKÖPINGS UNIVERSITET

TMMI68 CAD & ritteknik, 6hp

- Klassiskt ritteknik ritningsframställning
- MBD(?)

Academy

Industry / Community

Research

Education

Activity	Platform role
PD research	Subject
Marketing / Student magnet	Enabler
Course development	Subject / material
Industry collaboration	Subject / Reference
.....	.....
.....	.....

Activity	Platform role
Courses	CDIO Enabler
Lab exercises	Subject
Thesises	Subject
X-program collab.	Enabler
Preparation for emlyoment	Catalysator
.....	.....

A project as a platform...

- Potentially a real buissines case
- Characterized by a comprehensive and promising product idea allowing multi-aspect interaction with the four domains (Academy/Research, Acadamy/Education, Industry/Education etc.)
- Could be organized as company, joint venture, open source project, in-house etc...

Activity	Platform role
Financing	Potential product
RnD	Demonstrator
Academy collaboration	Subject / Reference
.....	.....
.....	.....
.....	.....

Activity	Platform role
First employment	Reference
First employment	"Startup"
Thesises	Subject
.....	.....
.....	.....
.....	.....

Exjobb vårterminen 2016!

- Alla projektförslag är välkomna!
- Gärna Creo-orienterade uppdrag!
- MBD
- Automation
- Mejla peter.hallberg@liu.se

<3

Peter Hallberg
IEI / Maskinkonstruktion

LINKÖPINGS UNIVERSITET